SIP-300 SERVICE NOTES

First Edition
(2nd Printing JAN. 20, 1984 E-2)

SPECIFICATIONS

GUITAR PRE-AMP SIP-300

Input level
HI: min** −38dB (10mV)
max +14dB (4V)
LO: min* −28dB (30mV)
max +24dB (12V)
*Nominal level: +4dBm; EFFECT: other controls max.

Input impedance
HI: 250kΩ
LO: 100kΩ

Output level
Balanced: nom +4dBm (1.23V)
max +20dBm (7.75V)
Unbalanced: nom +0.5dBm (820mV)
max +16dB (4.8V)

Output impedance:
600Ω (balanced and unbalanced)

Frequency range:
20Hz – 30kHz

S/N:
greater than 74dB (nominal operating levels)

Distortion:
0.1% (20Hz – 10kHz, ± 10dBm unbalanced)

Overdrive maximum gain: 42dB

CONTROL & SWITCH

Overdirve: VOLUME I
VOLUME II

Tone Creator:
BASS (−16dB to +16dB/50Hz)
MIDDLE (−10dB to +15dB/1kHz)
TREBLE (−15dB to 19dB/9kHz)

Selectoable:
BASS (40Hz/50Hz)
MIDDLE (500Hz/1kHz)
TREBLE (6kHz/9kHz)

Filter:
LOW CUT (60Hz, 12dB/oct)
HIGH CUT (6kHz, 12dB/oct)

Final Amp: VOLUME
MASTER VOLUME

CONNECTION JACKS

Input: HIGH GAIN
LOW GAIN

Output: BALANCED (XLR)
UNBALANCED
(STANDERD JACK)

Ext. Effect Loop: SEND
RETURN

Foot Switch: OVERDRIVE BYPASS
(FS-1) (LED)

Power Consumption: 8W

Weight: 4.0kg

Dimension:
482(W) × 92(H) × 247(D) mm

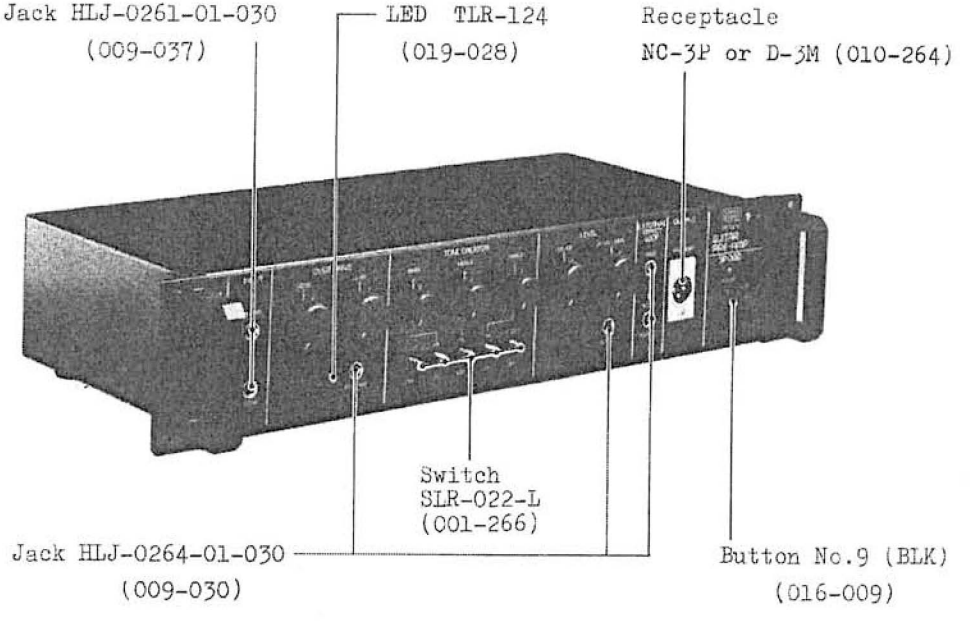

Power transformer

022H027C 100/117V

022H027D 220/240V

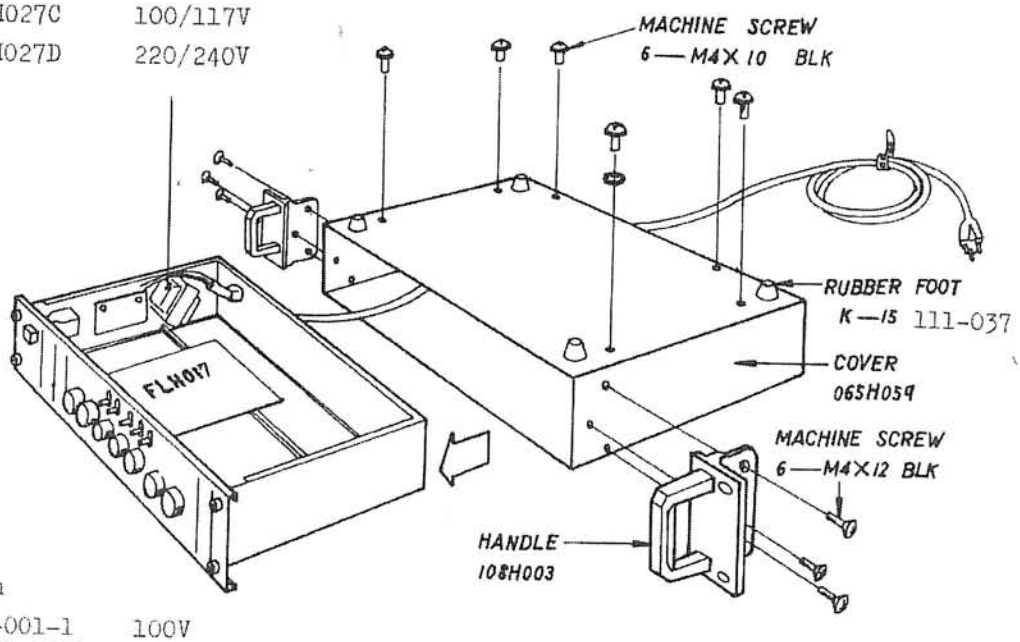

Switch

SDG5P-001-1 100V
(001-215)

SDG5P-001-2 117V
(001-216)

SDG5P-502 220/240V
(001-217)

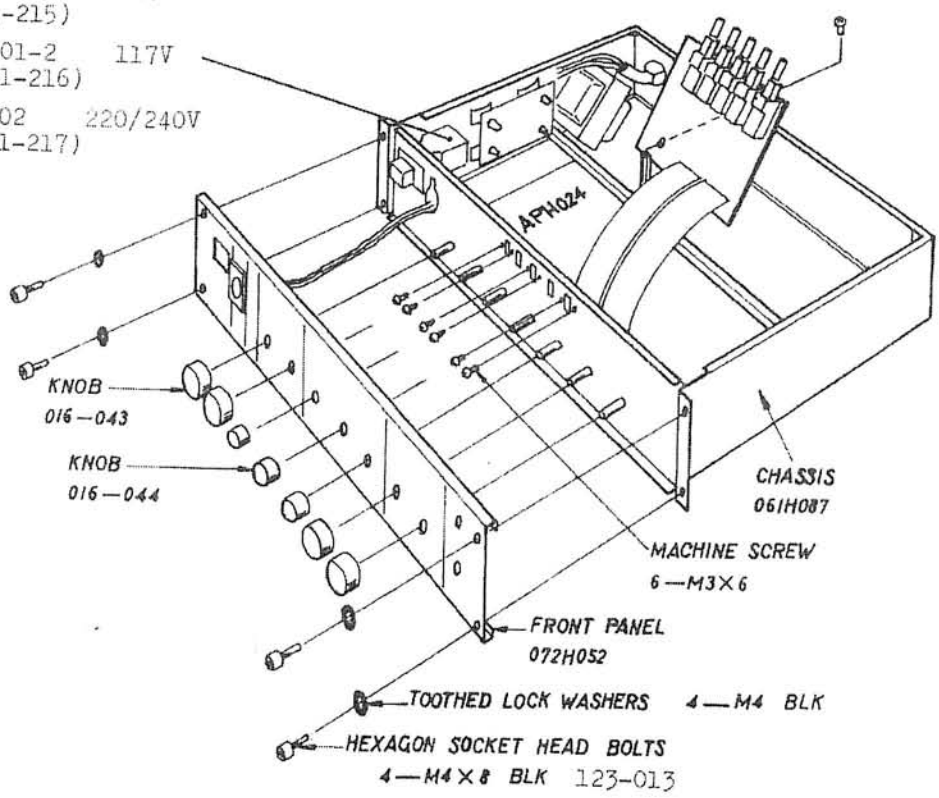

SIP-300

	No	AC 100V 117V	AC 220V 240V
Fuse Holder	FH101	None	TF758
	FH102		
Fuse	F101	Wire Jumper	Ⓢ 125mAT
	F102		

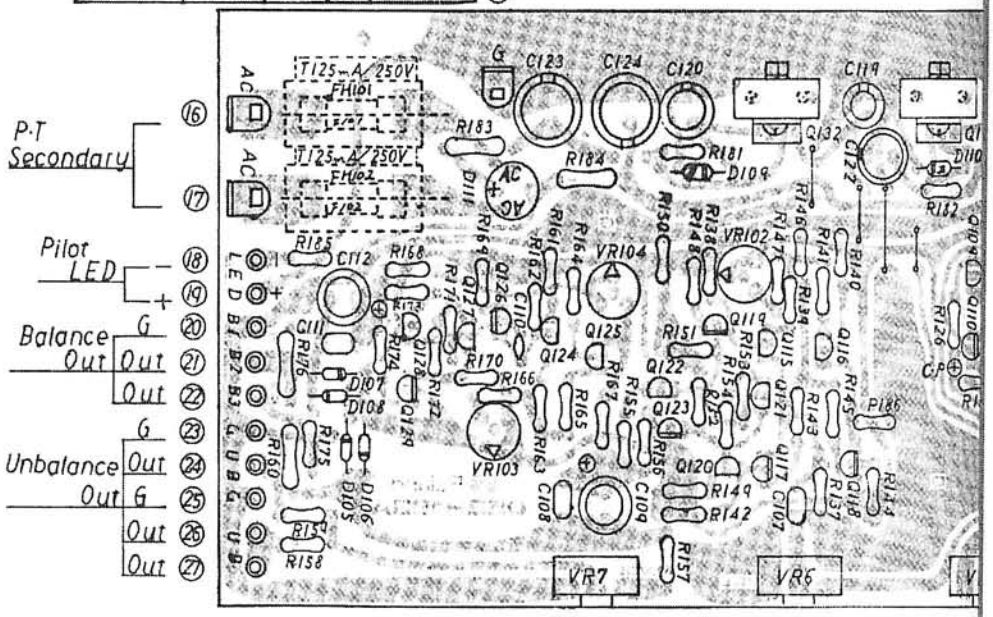

SIP-300 ADJUSTMENT PROCEDURE

SET THE CONTROL PANEL AS SHOWN BELOW

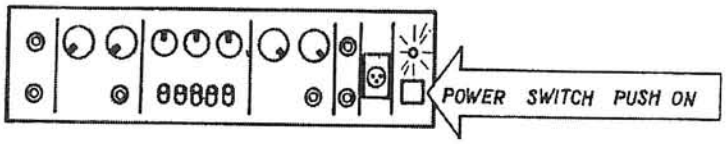

1. VOLTAGE CHECK

+21.5V (±1.3V)	+7.2V (±0.6V)
−21.5V (±1.3V)	−7.2V (±0.6V)

2. BIAS ADJUSTMENT

① TP2: To be adjusted to +1V DC at no input signal with VR101 (OVER DRIVE)

② TP3: For checking Normal/Effect signals

③ TP4: To be adjusted to 0V DC at no input signal with VR102 (FINAL AMP)

④ TP5: To be adjusted to 0V DC at no input signal with VR103 (INVERTER)

APH24A(141H024A) (PCB052H193

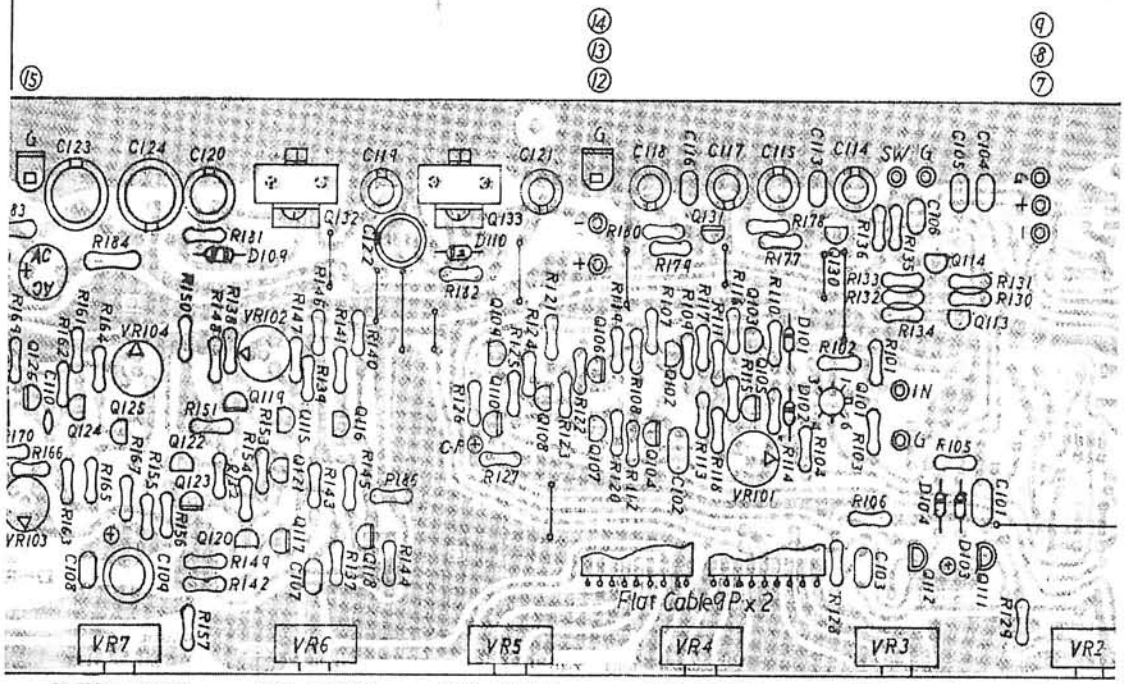

M.VOL 100KB VOL 100KB TRE 500KB MID 100KB BASS 100KB LEVEL 50

OCEDURE

OWN BELOW

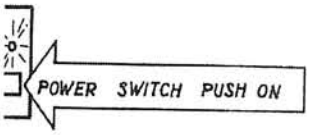

+7.2V (±0.6V)

−7.2V (±0.6V)

.o input signal with VR101 (OVER DRIVE)

gnals

input signal with VR102 (FINAL AMP)

input signal with VR103 (INVERTER)

3. GAIN ADJUSTMENT

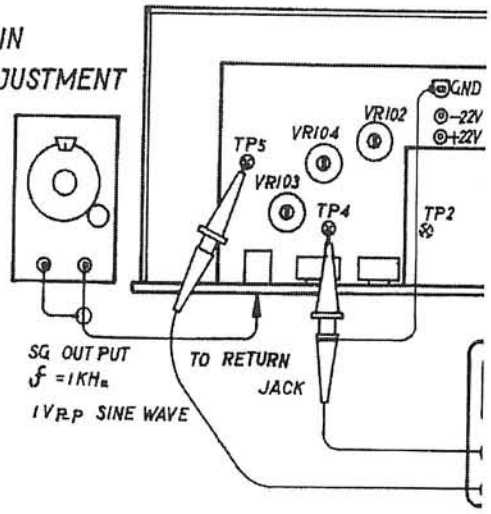

Connect and set instruments as shown above.

1. Adjust VR104 so that CH-2 output equals CH-
2. Make sure that there is a 180° phase shift is OFF.

Oct. 20, 1979

APH24A (141H024A) (PCB052H193A)

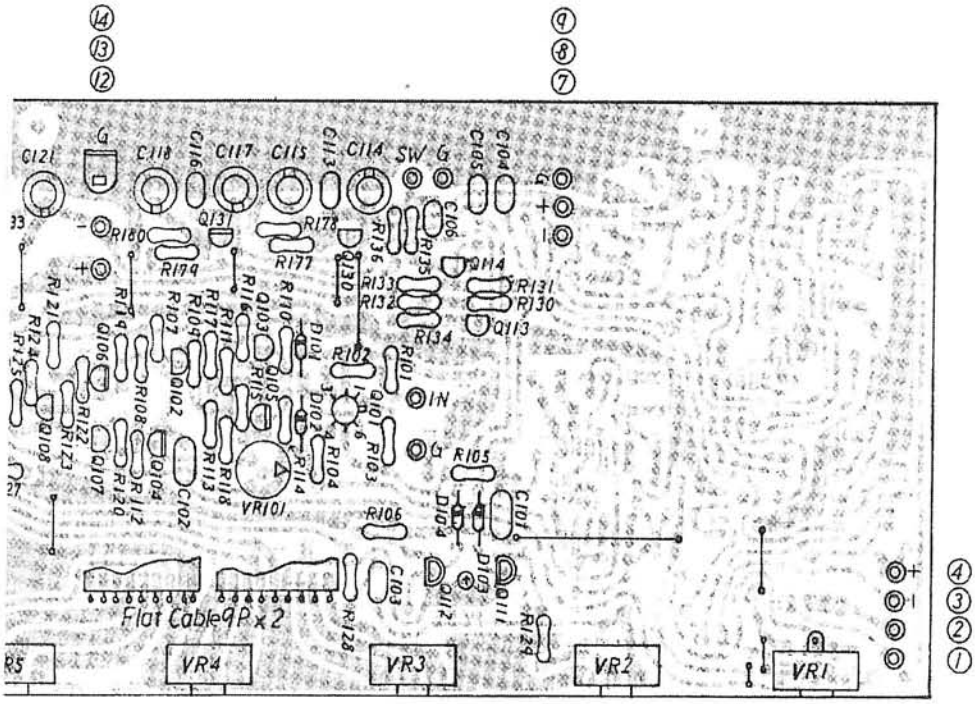

3. GAIN ADJUSTMENT

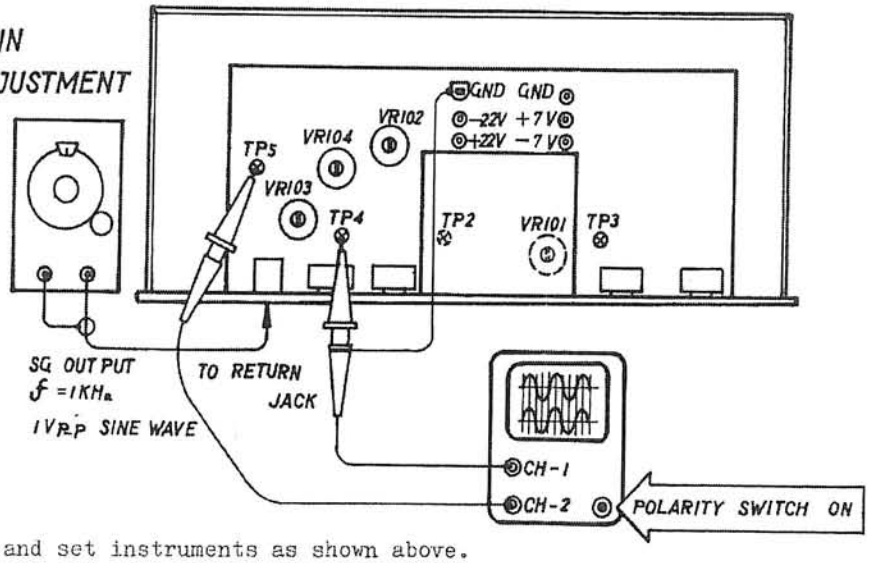

Connect and set instruments as shown above.

1. Adjust VR104 so that CH-2 output equals CH-1's in amplitude.(11V pp)
2. Make sure that there is a 180° phase shift between them when POLARITY is OFF.

Oct. 20,1979

Transistors
: FET 2SK30GR – Q111, 112 (2PCS)
: 2SC2240GR – Q102,103,107,108,109,115,116,120,121,124,125,127 (12PCS)
: 2SD667C – Q122,128,130 (3PCS)
: 2SC1815GR – Q113,114 (2PCS)
: 2SA970GR – Q104,105,106,110,117,118,119,126 (8PCS)
: 2SB647C – Q123,129,131 (3PCS)

: Dual FET B-412 (ITS30546) – Q101 (1PC)

Diodes
: M8555 – D101~D108 (8PCS)
: RD22EB – D109, D110 (2PCS)

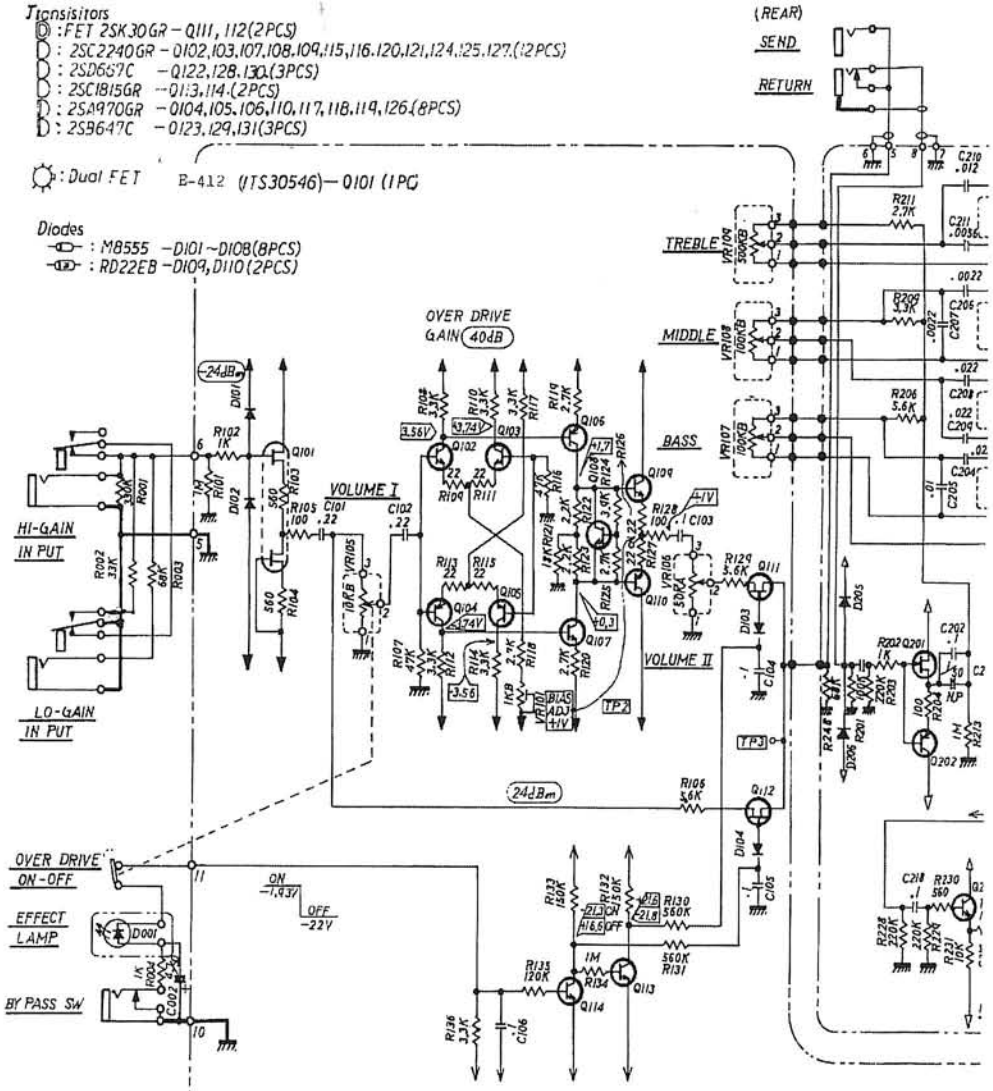

PRE AMP BOA

TRANSISTORS

FET	2SK30GR	– Q111, 112 (2PCS)
TR	2SC2240GR	– Q102, 103, 107, 108, 109, 115, 116, 120, 121, 124, 125, 127 (12PCS)
	2SD667C	– Q122, 128, 130 (3PCS)
	2SC1815GR	– Q113, 114 (2PCS)
	2SA970GR	– Q104, 105, 106, 110, 117, 118, 119, 126 (8PCS)
	2SB647C	– Q123, 129, 131 (3PCS)
	2SD526Y	– Q132
	2SB595Y	– Q133
DUAL FET	ITS 30546	– Q101
DIODES	TLR124	– D001, 002 (2PCS)
	M8555	– D101 ~ D108 (8PCS)
	RD22EB	– D109, D110 (2PCS)
	G1 W02	– D111 (1PC)

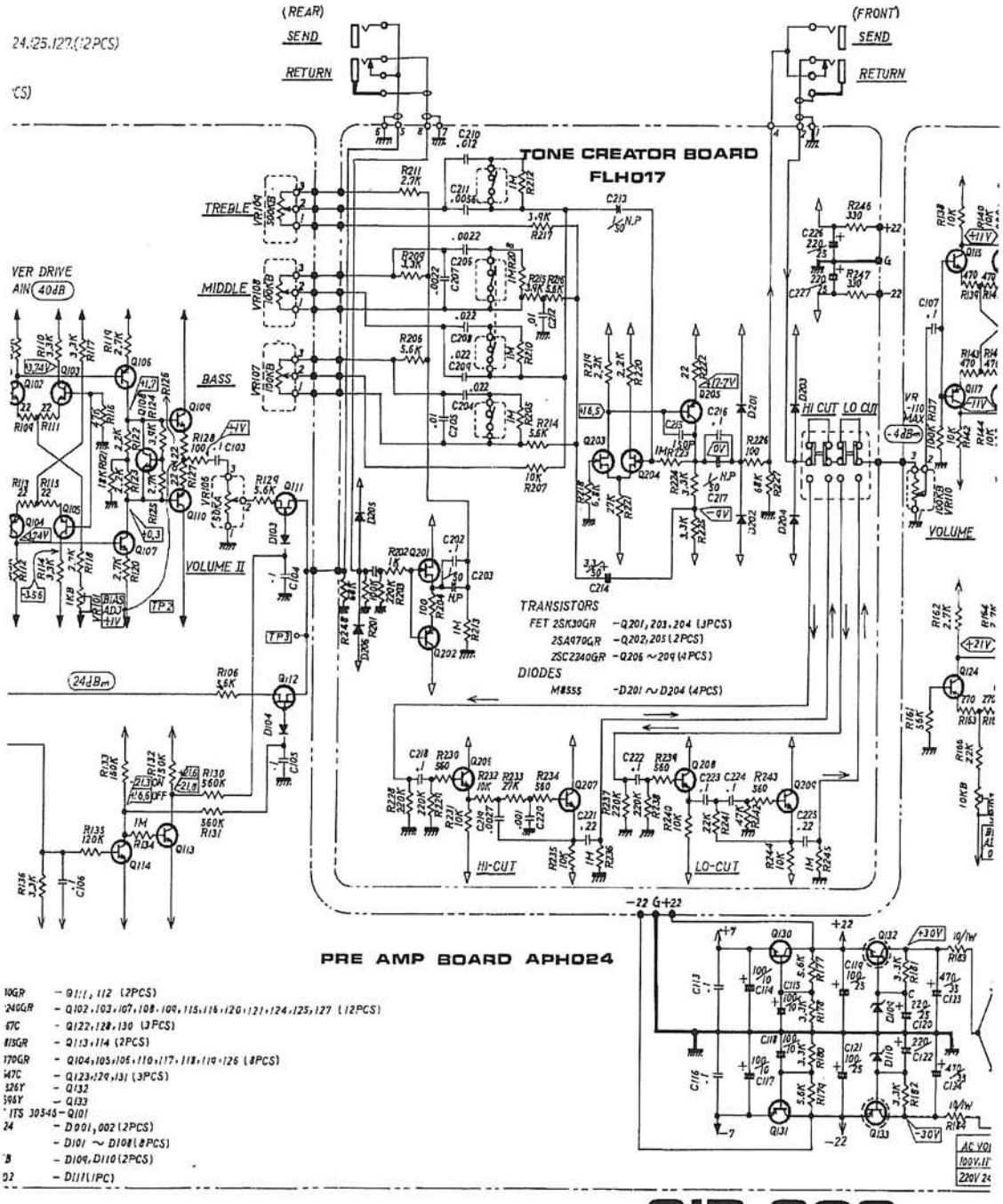
(REAR)
SEND
RETURN
(FRONT)
SEND
RETURN
TONE CREATOR BOARD
FLH017
TREBLE
MIDDLE
BASS
VOLUME II
VOLUME
HI CUT
LO CUT
HI-CUT
LO-CUT
TRANSISTORS
FET 2SK30GR -Q201,203,204 (3PCS)
2SA970GR -Q202,205 (2PCS)
2SC2240GR -Q206 ~ 209 (4PCS)
DIODES
M#555 -D201 ~ D204 (4PCS)
PRE AMP BOARD APH024
SIP-300

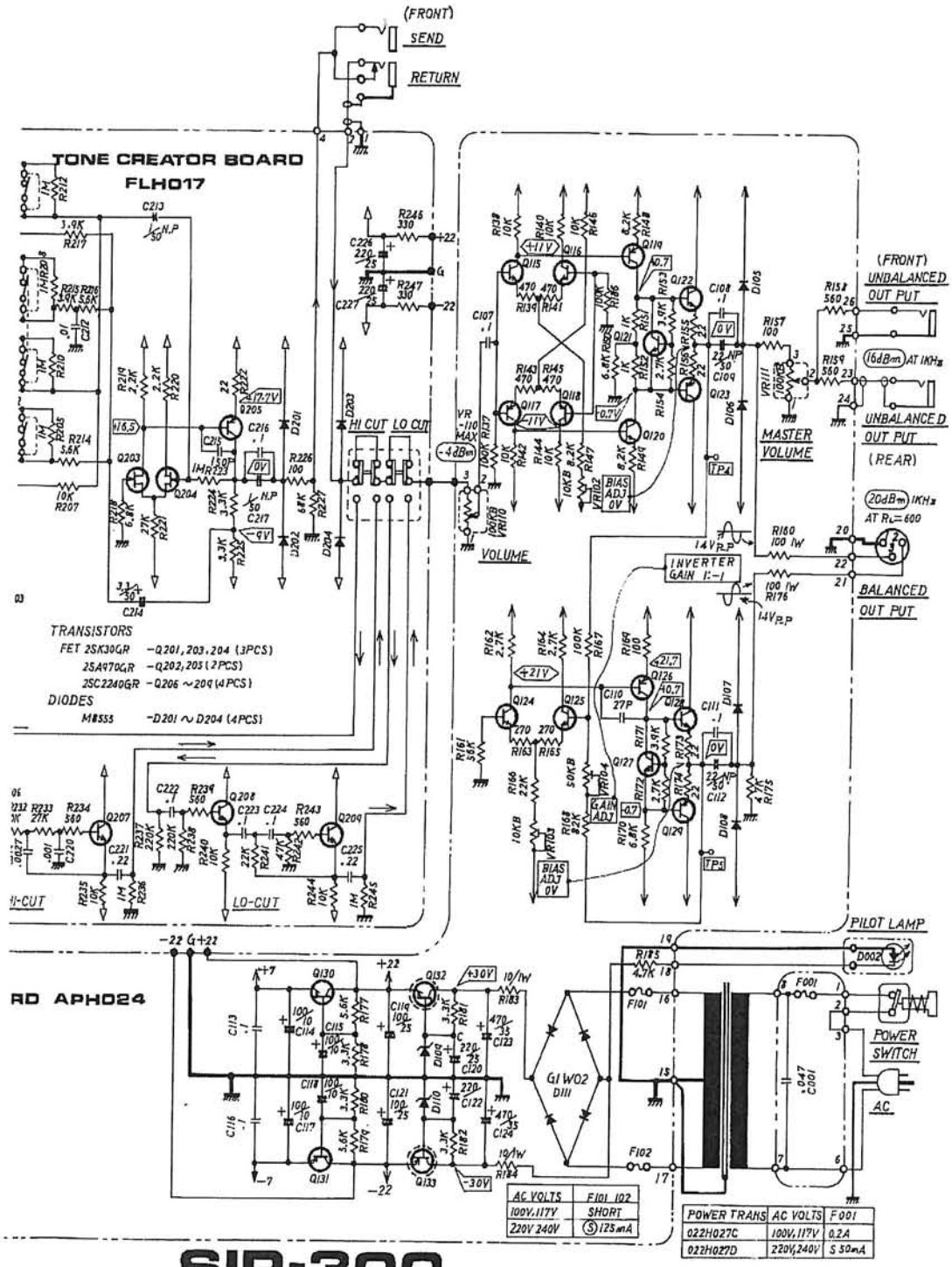

AC VOLTS	F101 102
100V,117V	SHORT
220V 240V	(S) 125mA

POWER TRANS	AC VOLTS	F001
022H027C	100V,117V	0.2A
022H027D	220V,240V	S 50mA

SIP-300 CIRCUIT DIAGRAM

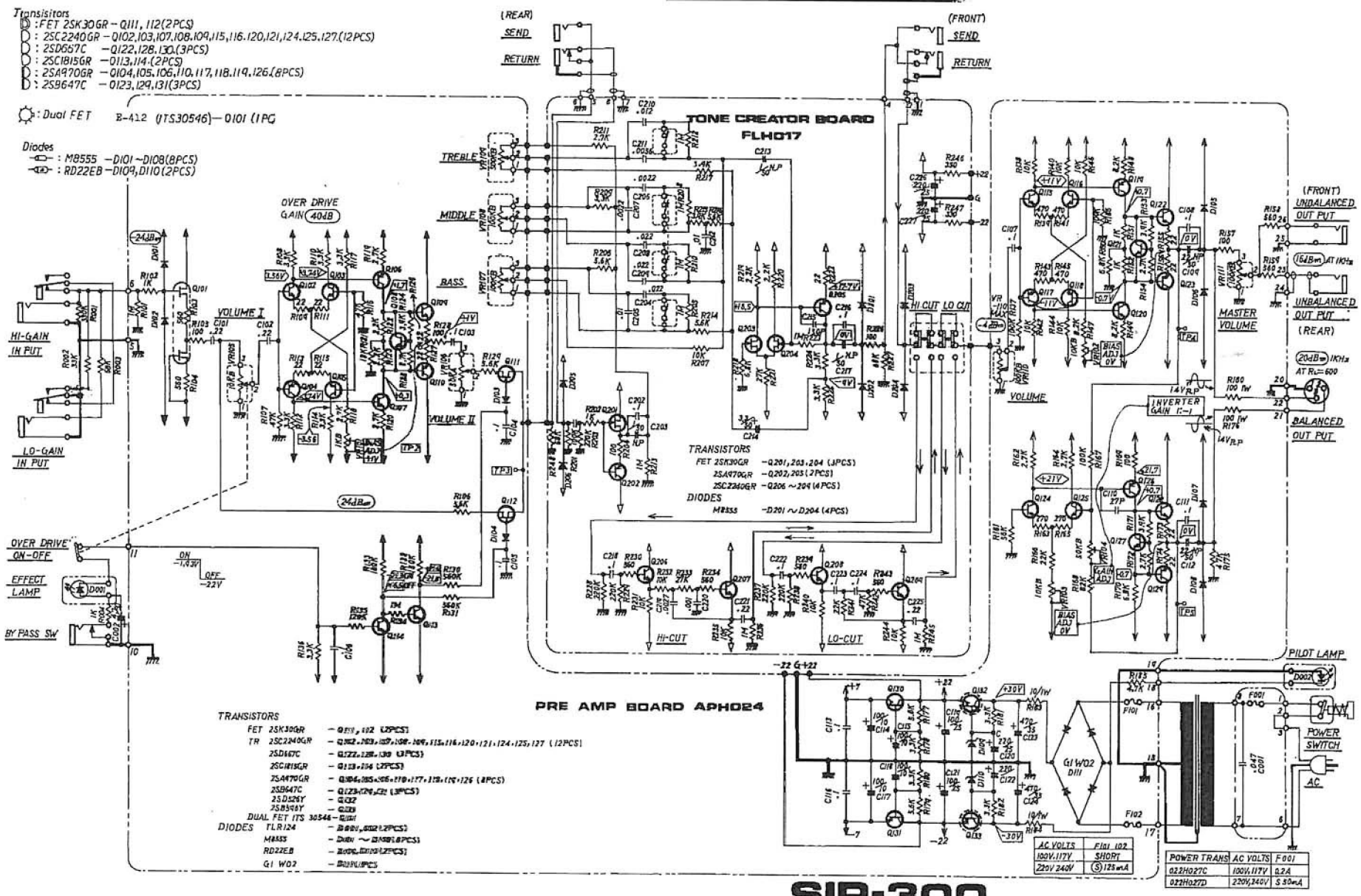

SIP-300 CIRCUIT DIAGRAM

	No	AC 100V 117V	AC 220V 240V
Fuse Holder	FH101	None	TF758
	FH102		
Fuse	F101	Wire Jumper	Ⓢ 125mAT
	F102		

APH24A(141H024A) (PCB052H193A)

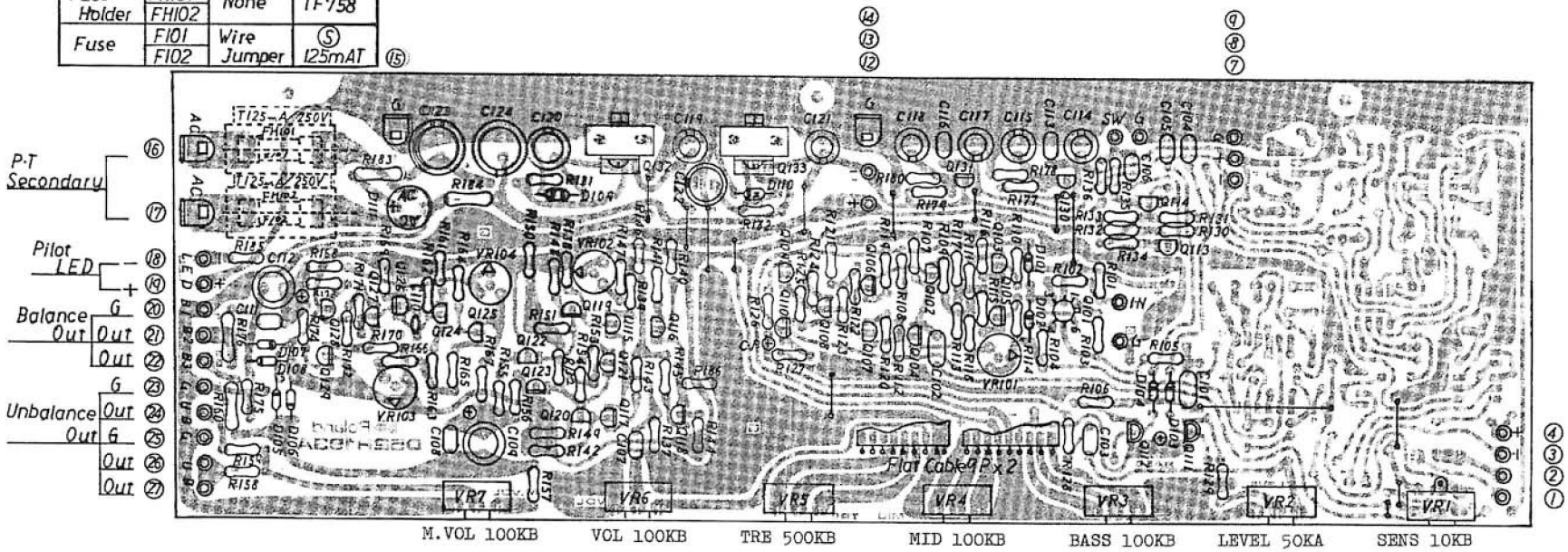

SIP-300 ADJUSTMENT PROCEDURE

SET THE CONTROL PANEL AS SHOWN BELOW

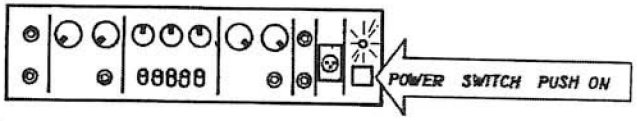

1. VOLTAGE CHECK

+21.5V (±1.3V) +7.2V (±0.6V)

−21.5V (±1.3V) −7.2V (±0.6V)

2. BIAS ADJUSTMENT

① TP2: To be adjusted to +1V DC at no input signal with VR101 (OVER DRIVE)

② TP3: For checking Normal/Effect signals

③ TP4: To be adjusted to 0V DC at no input signal with VR102 (FINAL AMP)

④ TP5: To be adjusted to 0V DC at no input signal with VR103 (INVERTER)

3. GAIN ADJUSTMENT

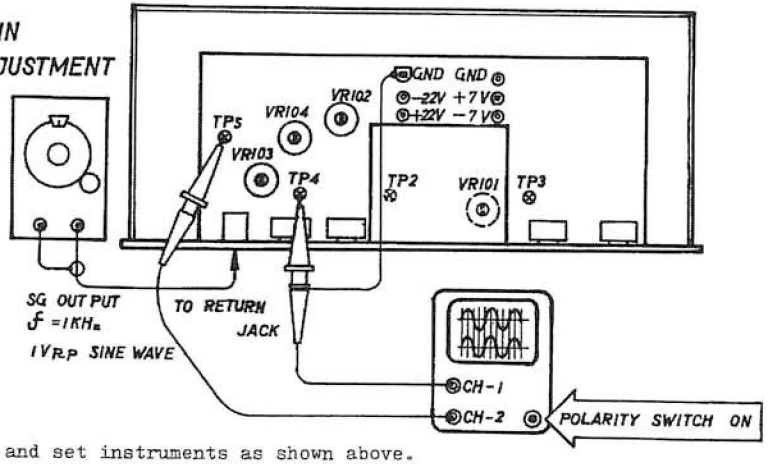

Connect and set instruments as shown above.

1. Adjust VR104 so that CH-2 output equals CH-1's in amplitude.(11V pp)
2. Make sure that there is a 180° phase shift between them when POLARITY is OFF.

Oct. 20, 1979

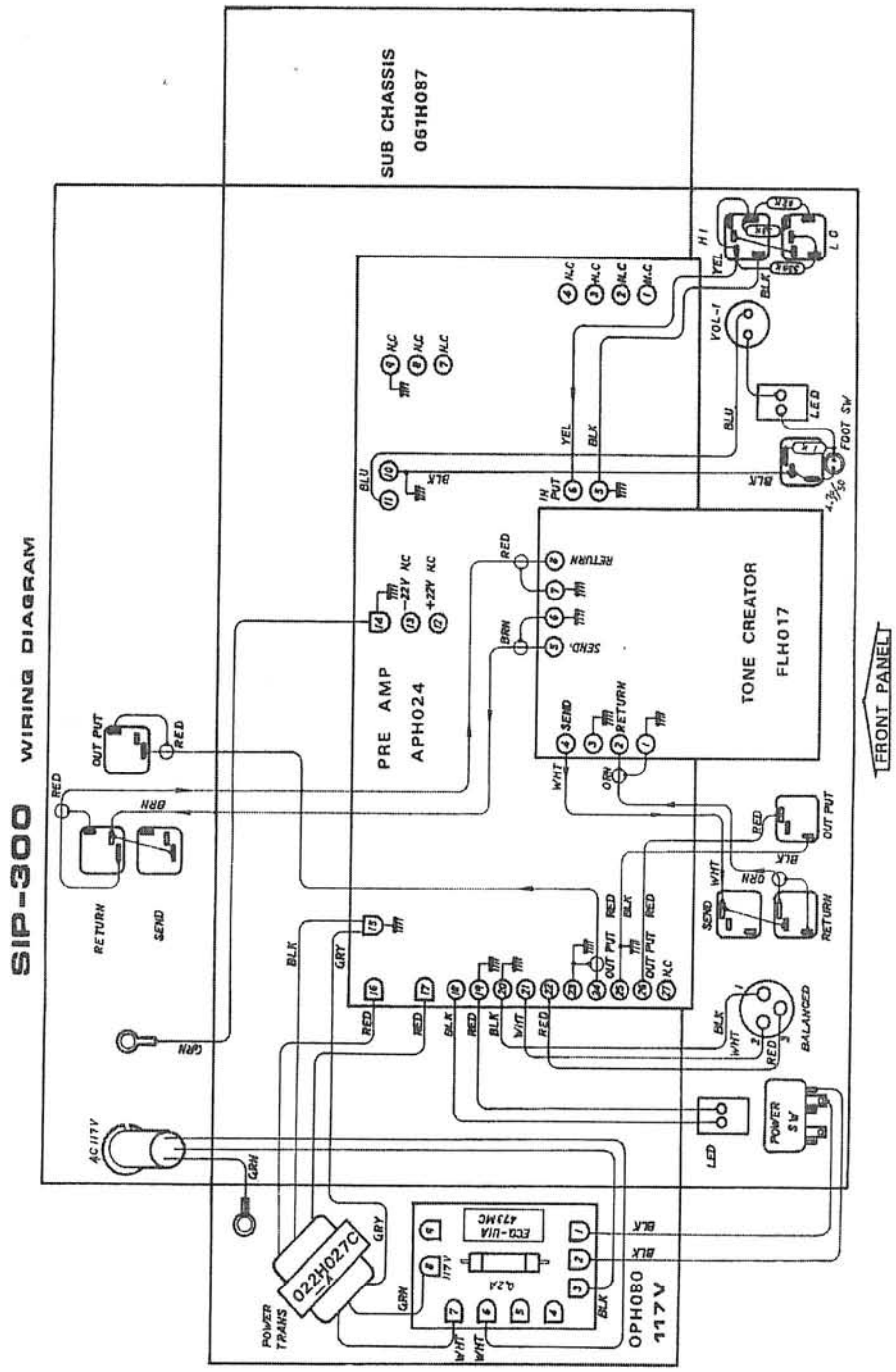
SIP-300 WIRING DIAGRAM
SUB CHASSIS
061H087
PRE AMP
APH024
TONE CREATOR
FLH017
FRONT PANEL
RETURN
SEND
OUT PUT
IN PUT
VOL-1
LED
FOOT SW
BALANCED
POWER
AS
POWER TRANS
022H027C
ECO-UIA
473MC
OPH080
117V
AC117V

Switch SLR-022(5PCS)

FLH17A(145H017A)
(PCB052H192A)

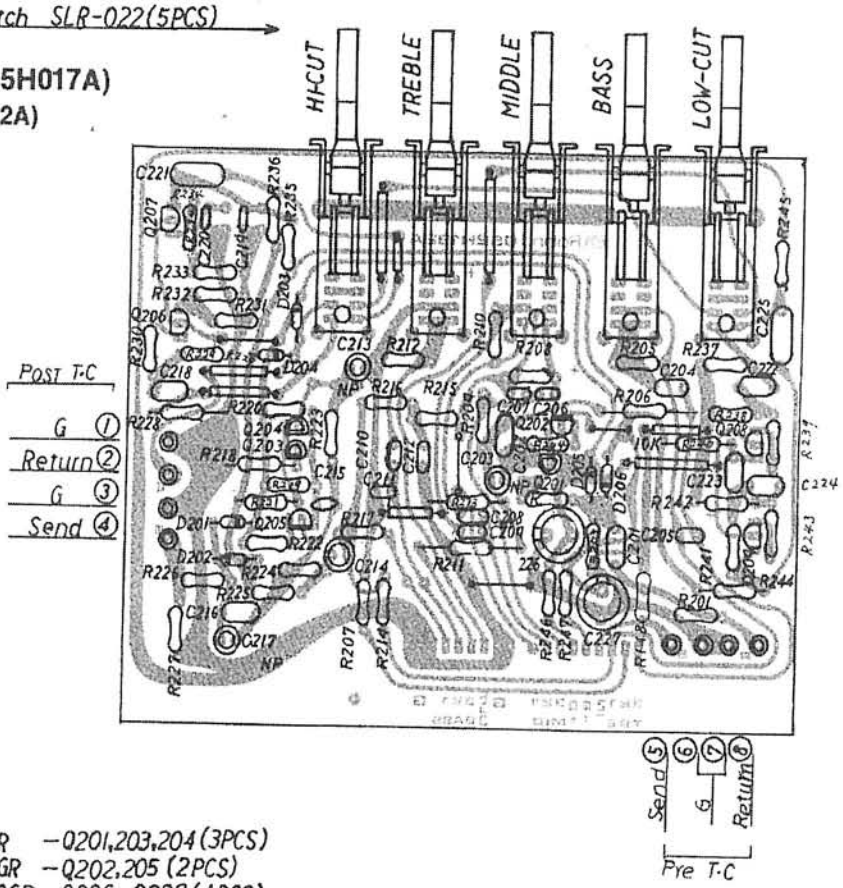

Transistors
- D :2SK30GR –Q201,203,204 (3PCS)
- B :2SA970GR –Q202,205 (2PCS)
- D :2SC2240GR –Q206~Q209 (4PCS)

Diodes
- :M8555 –D201~D206(6PCS)
- :Jumper Wire with Tube

220,240V

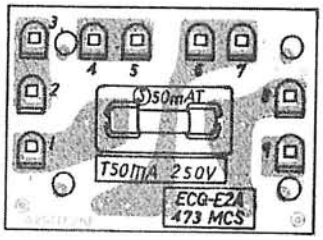

OPH 081A

149H081A
(PCB 052H185A)

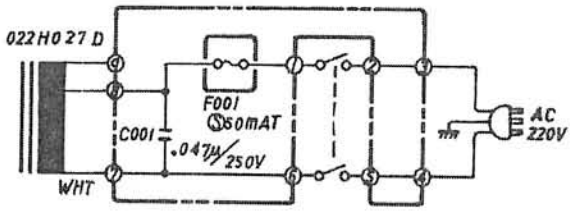

SDG-SP-502

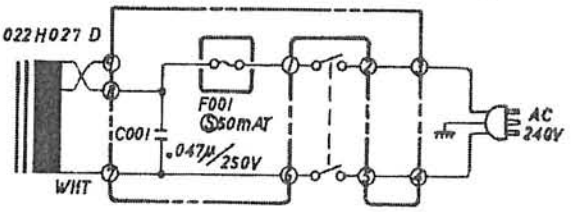

SDG-SP-502

PARTS LIST

072H052	Panel H52 front
061H087	Chassis H87
065H059	Cover H59
108H003	Handle H3
064-265	Holder no.265
120-015	Long nut no.15(spacer)3x12mm
120-017	Long nut no.17 3x54mm
065-261	Cover no.261 SLR-022-L
111-037	Rubber foot K-15
016-043	Knob no.43 rotary large
016-044	Knob no.44 rotary middle
016-009	Button no.9 blk power switch
009-030	Jack HLJ-0264-01-030
009-037	Jack HLJ-0261-01-030 w/switch
010-264	XLR connector male NC-3P or D-3M

PCB

141H024A	APH24A Preamp (PCB 052H193A)
145H017A	FLH17A Tone creator(052H192A)
149H079A	OPH79A Terminal (052H185A)
149H080A	OPH80A (PCB 052H185A) 117V
149H081A	OPH81A (052H185A) 220/240V
052H195	LED mounting less parts

SWITCH

001-215	SDG5P-001-1 power 100V
001-216	SDG5P-001-2 power 117V
001-217	SDG5P-502 power 220/240V
001-266	SLR-022-L lever

022H027C	Power transformer 100/117V
022H027D	Power transformer 220/240V

SEMICONDUCTOR

Transistor

017-036	E-412 (ITS30546) dual FET
017-016	2SK30A-GR FET
017-119	2SA970-GR
017-128	2SB596-Y
017-127	2SB647-C
017-106	2SC1815-GR
017-123	2SC2240-GR
017-090	2SD526-Y
017-126	2SD667-C

Diode

018-087	M8555
018-082	W02 rectifier bridge
018-050	RD22EB zener
019-028	TLR-124 LED

POTENTIOMETER

026-413	EVHCCEK20B14 w/switch
026-264	EVHCCA(VM10R)K20A54 50KA
026-277	VM10R(EVHCCA)K20B55 500KB
026-272	VM10R(EVHCCA)K20B15 100KB
030-465	SR19R 10KB trimmer
030-469	SR19R 50KB trimmer
030-459	SR19R 1KB trimmer

FUSE. FUSEHOLDER

008-057	Fuse SEMKO T125A sec.220/240V
008-053	Fuse SEMKO T50mA prim.220/240V
008-012	Fuse MGP 0.2A prim. 117V
012-003	Clip TF-758

Oct. 20, 1979

CAPACITOR

Polyester Film

035-047	ECQ-E10473MV 0.047mfd/1000V	100V
035-108	ECQ-U1A473MC 0.047mfd/125AC	117V
035-310	ECQ-E2A473MCS 0.047/1000V	220/240V

Electrolytics

032-190	ECEA50N1 1mfd/50V	Bi-polar
032-278	ECEA50N22 22mfd/50V	Bi-polar
	ECEA1HV4R7S 4.7mfd/50V	
	ECEA1AS101 100mfd/10V	
	ECEA1ES101 100mfd/25V	
	ECEA1ES221 220mfd/25V	
	ECEA1VS473 470mfd/35V	

RESISTOR

044-587	ERG-1ANJ-100 10-ohm	1w
044-586	ERG-1ANJ-101 100-ohm	1w

MISCELLANEOUS

047-040	Line cord strain relief	
	SR-4N-4	100V
047-031	SR-6N3-4	117V
047-003	BU-4801	220/240V
047-023	EA-1702B clamp	220/240V
064H074	Holder H74	100V
064H075	Holder H75	220/240V
053H049	Flat cable H49 9-lead 120mm	
048-018	Heat sink no.18 (SB-7)	
073-037	Poly carbonate pipe 18mm	
123-013	Hexagon socket head bolt 4x8mm	
042-041	Earth terminal no.41	