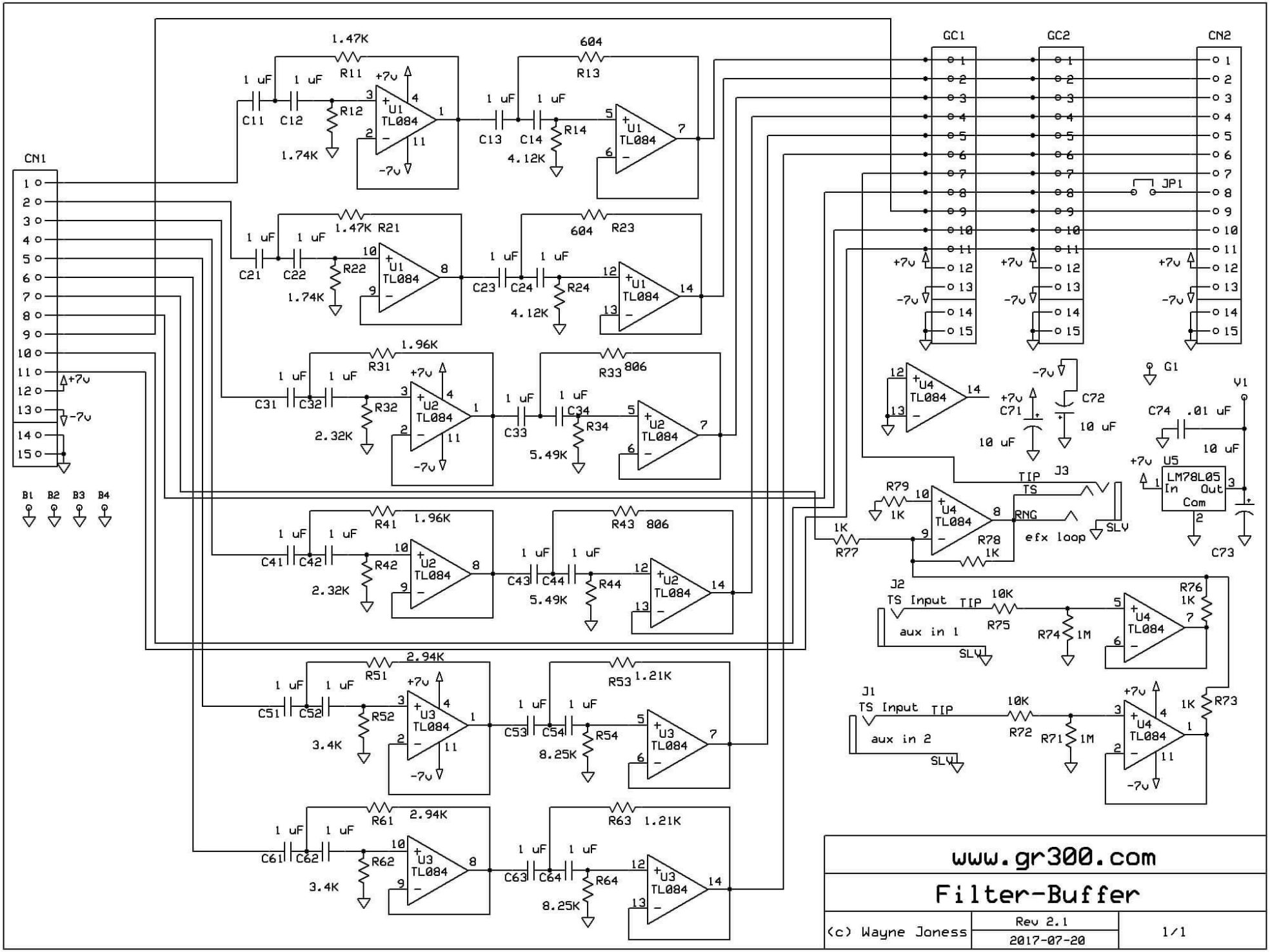

CN1
GC1
GC2
CN2
JP1
B1 B2 B3 B4
1.47K R11
604 R13
1.47K R21
604 R23
1.96K R31
806 R33
R41 1.96K
R43 806
2.94K R51
1.21K R53
R61 2.94K
R63 1.21K
1 uF
+7v
-7v
U1 TL084
U2 TL084
U3 TL084
U4 TL084
U5 LM78L05
In Out Com
C11 C12 C13 C14 C21 C22 C23 C24 C31 C32 C33 C34 C41 C42 C43 C44 C51 C52 C53 C54 C61 C62 C63 C64
R12 1.74K
R14 4.12K
R22 1.74K
R24 4.12K
R32 2.32K
R34 5.49K
R42 2.32K
R44 5.49K
R52 3.4K
R54 8.25K
R62 3.4K
R64 8.25K
C71 10 uF
C72 10 uF
C74 .01 uF
10 uF
C73
G1
V1
J3
TIP
TS
RNG
SLV
efx loop
R79 1K
R77 1K
R78 1K
J2
TS Input
aux in 1
R75 10K
R74 1M
R76 1K
J1
aux in 2
R72 10K
R71 1M
R73 1K
www.gr300.com
Filter-Buffer
(c) Wayne Joness
Rev 2.1
2017-07-20
1/1